87442 Coffee Table Wire Double Black (2/Set)
87674 Coffee Table Wire Double Brass (2/Set)
87819 Coffee Table Wire Double Black Bubble (2/Set)

KARE DESIGN

STEP 1

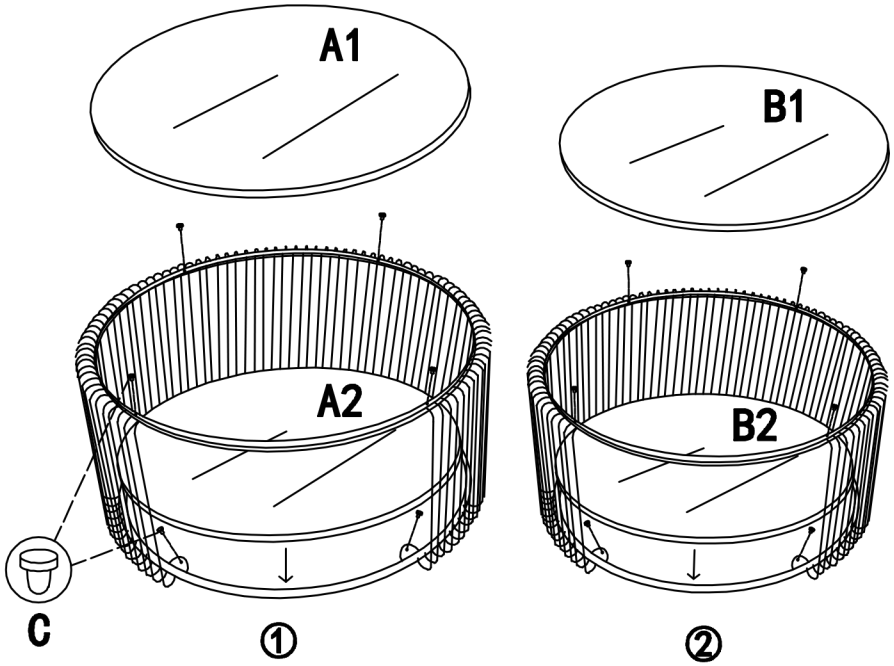

STEP 2

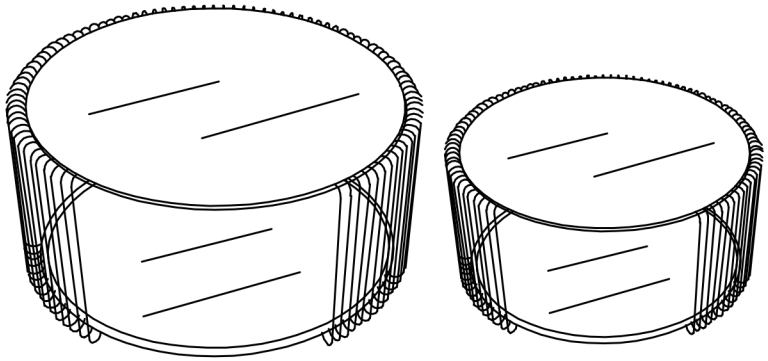

NO.	①	②	A1	A2	B1	B2	C
TYPE			(Φ63.8CM)	(Φ61.5CM)	(Φ54CM)	(Φ52CM)	
QTY	1 PC	1 PC	1 PC	1 PC	1 PC	1 PC	16 PCS