KARE DESIGN

20

X 1

58245 Floor Lamp Shield 150cm

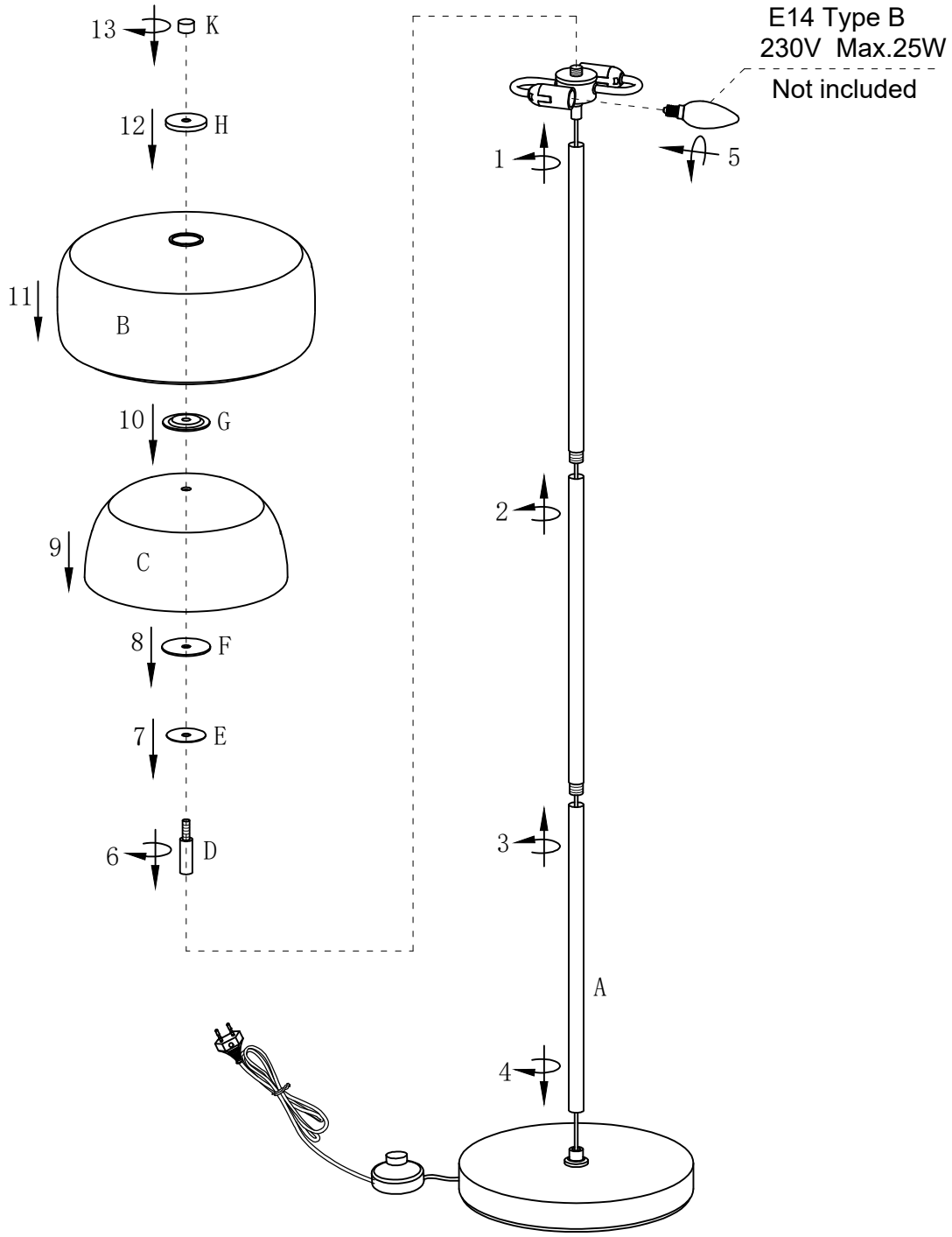

NO	A	B	C	D	E	F	G	H	K
TYPE		Ø330*145mm	Ø260*120mm	Ø16*68mm	Ø50*1mm	Ø62*2mm	Ø60*5mm	Ø53*5mm	Ø20*12mm
QTY	1PC	1PC	1PC	1PC	1PC	1PC	1PC	1PC	1PC